Axial roof fan

Tower-A

Air capacity – up to 2500 m³/h

Use

- Exhaust ventilation systems installed in various premises.
- Roof mounting.
- For any types of roofs or vertical ventilation shafts.

Design

- Steel casing and impeller with a special polyester atmospheric resistant coating.
- Horizontal air exhaust.
- The fan is equipped with a terminal block for connection to power mains.
- The fan is rated for continuous operation.
- A connecting plate with an intake opening is designed to facilitate mounting to the roof surface.

Motor

- Two- or four-pole asynchronous motor with external rotor and axial impeller.
- Single-phase (**E**) motor modification.
- Equipped with ball bearings for longer service life.
- Overheating protection by built-in thermal switches with automatic restart.

Speed control

- Smooth speed control with an external thyristor controller or step speed control with an external auto transformer (both available upon separate order).

Mounting

- Roof mounting directly above a ventilation shaft or air duct.
- The fan is connected to the air duct with the intake flange that is fixed to the fan base.
- The fan base has holes for fixing bolts that attach the fan to a stable level surface or a roof frame.
- Roof frame and intake flange available on separate order.
- Power is supplied through an external terminal box.

Overall dimensions

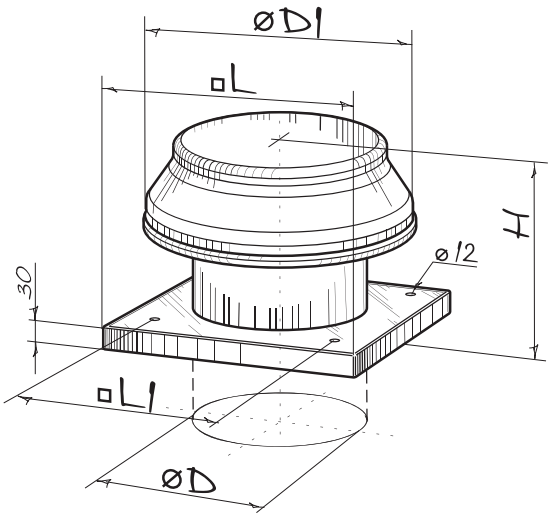

Type	Dimensions [mm]					Weight [kg]
	ØD	ØD1	H	L	L1	
Tower-A 200 2E	207	341	220	410	245	4,3
Tower-A 250 2E	262	401	250	460	330	6,5
Tower-A 250 4E	262	401	250	460	330	6,5
Tower-A 300 2E	312	401	260	560	450	8,7
Tower-A 300 4E	312	401	260	560	450	8,7
Tower-A 350 4E	362	500	260	630	535	10,9

Specifications

Parameters	Tower-A 200 2E	Tower-A 250 2E	Tower-A 250 4E	Tower-A 300 2E	Tower-A 300 4E	Tower-A 350 4E
Voltage [V / 50 Hz]	230	230	230	230	230	230
Power [W]	55	80	50	145	75	140
Current [A]	0,26	0,4	0,22	0,66	0,35	0,65
Maximum air capacity [m³/h]	860	1050	800	2230	1340	2500
RPM [min⁻¹]	2300	2400	1380	2300	1350	1380
Sound pressure level at 3 m distance [dBA]	50	60	55	60	58	62
Max. operating temperature [°C]	-30 +60	-30 +60	-30 +60	-30 +60	-30 +60	-30 +60
Ingress protection rating	IP X4	IP X4	IP X4	IP X4	IP X4	IP X4

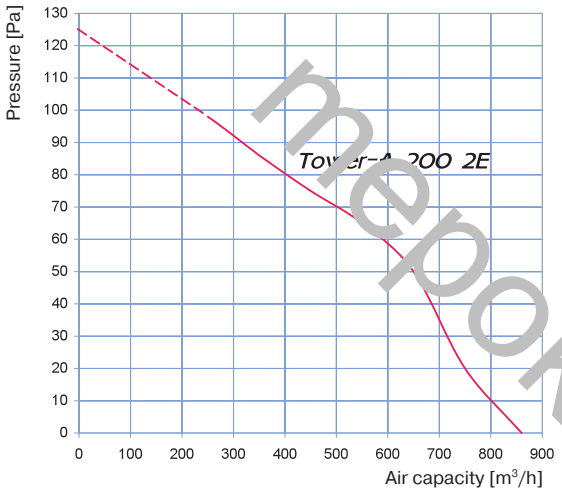

Sound-power level	Octave-frequency band [Hz]								
	Gen	63	125	250	500	1000	2000	4000	8000
L_{WA} to inlet, [dBA]	66	58	58	57	58	57	53	52	46
L_{WA} to environment, [dBA]	65	57	57	58	60	55	57	53	47

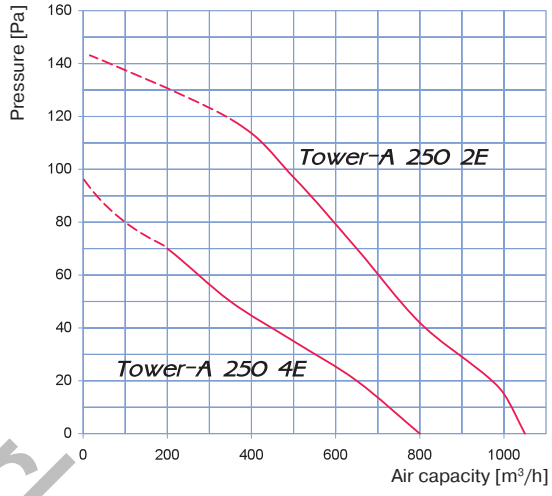

Sound-power level	Octave-frequency band [Hz]								
	Gen	63	125	250	500	1000	2000	4000	8000
Tower-A 250 2E									
L_{WA} to inlet, [dBA]	76	69	66	69	71	68	68	61	56
L_{WA} to environment, [dBA]	[illegible]	65	70	69	71	69	64	62	60
Tower-A 250 4E									
L_{WA} to inlet, [dBA]	59	50	51	53	55	53	51	45	43
L_{WA} to environment, [dBA]	[illegible]	5[illegible]	52	54	55	54	51	45	42

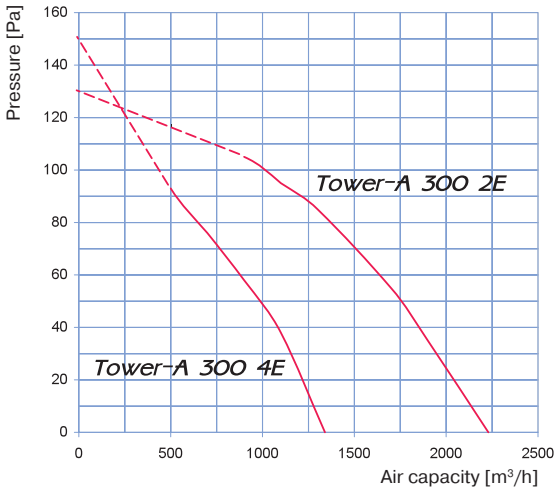

Sound-power level	Octave-frequency band [Hz]								
	Gen	63	125	250	500	1000	2000	4000	8000
Tower-A 300 2E									
L_{WA} to inlet, [dBA]	79	68	71	73	72	71	69	64	59
L_{WA} to environment, [dBA]	78	68	72	72	74	72	70	64	61
Tower-A 300 4E									
L_{WA} to inlet, [dBA]	66	55	57	58	58	57	53	51	48
L_{WA} to environment, [dBA]	65	56	56	57	57	57	55	51	49

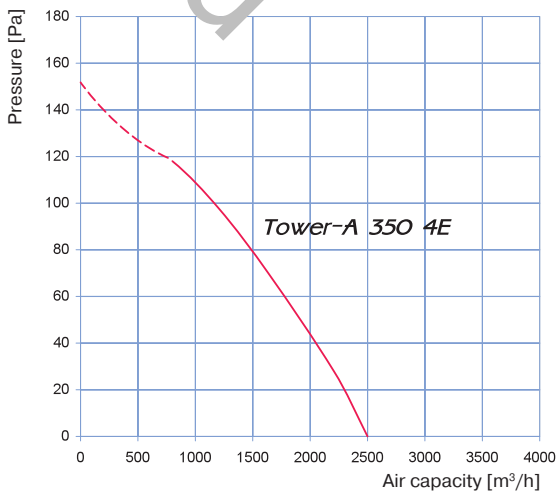

Sound-power level	Octave-frequency band [Hz]								
	Gen	63	125	250	500	1000	2000	4000	8000
L_{WA} to inlet, [dBA]	70	61	62	61	65	61	58	56	53
L_{WA} to environment, [dBA]	68	61	63	63	62	60	60	56	52